DATA SHEET



SMARTSCOPE® E7

BENCHTOP FULLY AUTOMATIC 3-AXIS VIDEO METROLOGY SYSTEM

SmartScope E7 is ideal for those looking for a benchtop system tailored for video edge detection metrology.

The fixed lens IntelliCentric-E optical system and VIRTUAL ZOOM™ provide a high resolution image, ideal for manufacturers seeking an automatic, 3-axis video measurement system that is cost-effective and easy to use. SmartScope E7 also offers:

- **ADVANCED LIGHTING**
  All LED coaxial, substage profile, and SmartRing™ light illumination comes standard.
- **STURDY, STABLE CONSTRUCTION**
  A heavy-duty cast base and integral compound stage with Y-axis center drive provides stability.
- **MULTISENSOR VERSATILITY**
  Optional touch probe provides multisensor coverage.



Shown with optional Touch Probe.

SMARTSCOPE® E7

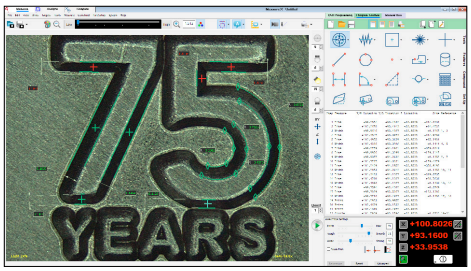

Measure-X® metrology software offers 2D CAD program generation and general-purpose dimensional measurement with multisensor and rotary axis support.

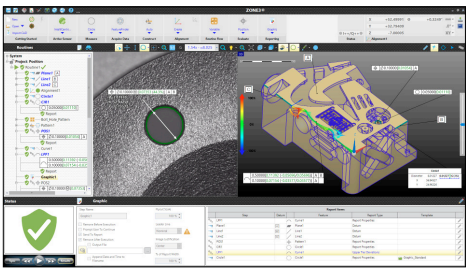

ZONE3® Metrology Software represents a totally new way of working with multisensor measurement systems, providing faster, easier, and more productive measurements.

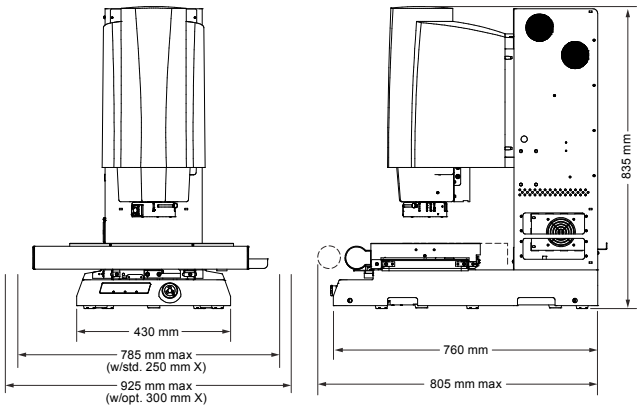

System Weight: 120 kg
Shipping Weight: 180 kg

	Standard	Optional
XYZ Travel	250 x 150 x 200 mm	Extended X-axis: 300 mm
XYZ Scale Resolution	0.1 µm	
Drive System	DC servo with 3-axis control (X, Y, Z) and 3-axis joystick controller	Multifunction handheld controller (in lieu of joystick)
Worktable	Hardcoat anodized with fixture holes and removable stage glass; 25 kg recommended max payload	
Rotary Axis		Miniature Servo Rotary (MSR™), MicroTheta Rotary (MTR™)
Optics[1]	Fixed optical magnification with VIRTUAL ZOOM, E 8.10 standard lens	**Replacement Lenses:** E 16.20 Wide Field-of-View/Long Working Distance, E 4.5 High Magnification
Illumination	Substage LED profile, coaxial LED surface, SmartRing LED ring light	Conical SmartRing (included with E 4.5 lens)
Metrology Camera	6 megapixel color digital metrology camera	
Field of View	7.0 mm x 5.2 mm	**E 16.20:** 14.0 mm x 10.4 mm **E 4.5:** 3.5 mm x 2.6 mm
Minimum Feature Size[2]	10 µm	**E 16.20:** 20 µm **E 4.5:** 5 µm
Working Distance	62 mm	**E 16.20:** 110 mm **E 4.5:** 31 mm
Sensor Options		**Tactile:** TP20 or TP200 Touch Probe
Software	Measure-X metrology software, QVI® Portal	**Metrology Software:** ZONE3 Express, Prime, or Pro in lieu of or in addition to Measure-X **Productivity Software:** Measure-X Analyze, EVOLVE® Suite (Design, Manufacturing, SmartProfile®, SPC) **Offline Software:** Measure-X, ZONE3
System Controller	Windows® based with up-to-date processor and onboard networking/communication ports	High-Performance Controller
Controller Options		24" flat panel LCD monitor or dual 24" flat panel LCD monitors, keyboard, 3-button mouse (or user supplied)
Accessories		Digital I/O Automation Interface
Power Requirements	100-120 VAC or 200-240 VAC, 50/60 Hz, 1 phase, 500 W	
Safe Operating Environment	15-30 °C, non-condensing	
Rated Environment	Temperature 18-22 °C, stable to ± 1 °C, max rate of change 1.0 °C / hour, max vertical gradient of 1 °C / meter; 30-80% humidity; vibration <0.001g below 15 Hz	
XY Area Accuracy	E_2 = (2.2 + 5L/1000) µm	
Z Linear Accuracy	E_1 = (3.8 + 5L/1000) µm	E_1 = (2.8 + 5L/1000) µm (requires optional E 4.5 lens)

Accuracy is evaluated with a QVI compensation and verification procedure where "L" is measured length in millimeters. Specifications apply within the rated environment. Standard optical specifications apply at the highest magnification of the standard configuration. XY Accuracy applies with an evenly distributed load up to 5 kg in the standard measuring plane. The standard measuring plane is defined as a plane that is within 25 mm of the worktable surface. Depending on load distribution, accuracy at maximum payload may be less than standard. Factory and on-site verification of enhanced Z accuracy specifications are quoted on request. This equipment complies with EMC directive EN IEC 61326-1, Class A.

[1]Lenses can be manually interchanged to change magnification and working distance.

[2]Based on width measurement of USAF resolution test chart in best focus at the highest magnification. For reference only.

Learn more about OGP Measurement Systems at ogpnet.com



ogp Confidence. When Results Matter™

World Headquarters:
Rochester, NY, USA
585.544.0400
www.ogpnet.com

OGP Shanghai Co, Ltd:
Shanghai, China
86.21.5045.8383/8989
www.smartscope.com.cn

OGP Messtechnik GmbH:
Hofheim-Wallau, Germany
49.6122.9968.0
www.ogpmesstechnik.de

Optical Gaging (S) Pte Ltd:
Singapore
65.6741.8880
www.smartscope.com.sg

© 2026 Quality Vision International Inc. Specifications subject to change without notice. All rights reserved. Trademarks are the properties of their respective owners. Export of this product is controlled under U.S. Export Regulations. An Export License may be required for deliveries or re-export outside the United States. Part Number 794260-0226